Lens Specification	
Focal length	9.00mm (at λ=300nm)
Back focal length	15.01 mm
Mechanical back	13.53 mm
Aperture ratio	F/2.8 ~ F/16
Image size	1/2" (4.8mm x 6.4mm)
Magnification	
Distortion	-6.4 %
Angle of view at INF.	
Vertical	30.5 °
Horizontal	40.7 °
Diagonal	50.8 °
Resolution	
Center	
Corner	
Pupil positions	
Entrance pupil	9.15 mm (Front lens)
Exit pupil	-27.11 mm (Image plane)
Principal points	
Object space	15.16 mm (Front lens)
Image space	-9.00 mm (Image plane)
Coating	(λ=300nm)
All surfaces are antireflection coated. MgF2 single coated.	

Note:

1. Mini. Working Dist.
   10.6mm (at λ=250nm)
   22.6mm (at λ=300nm)
   35.3mm (at λ=350nm)
   45.7mm (at λ=390nm)

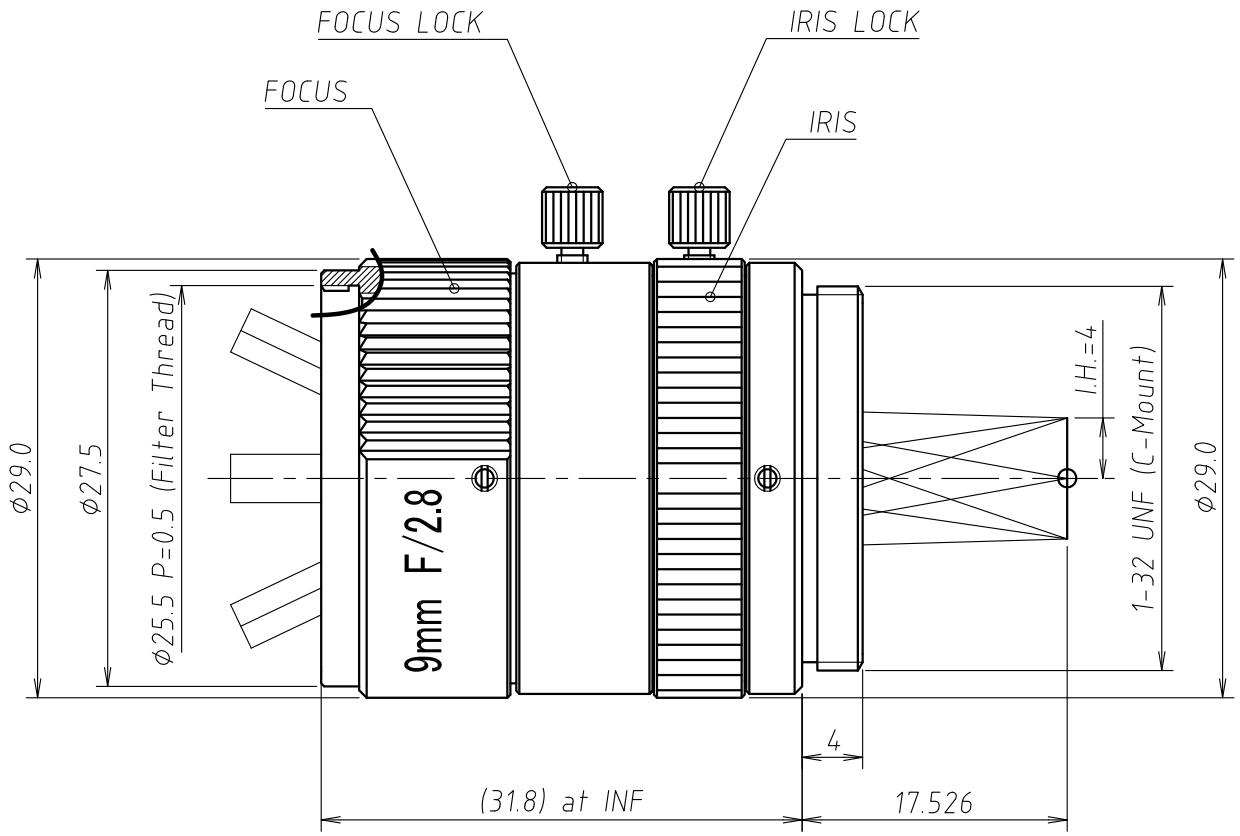

EHD imaging GmbH
Zum Rennplatz 15
49401 Damme/Germany
Phone: +49-5491-2090
Fax: +49-5491-2098
web: www.ehd.de
e-mail: info@ehdimaging.de

4			TITLE 9mm F/2.8 UV LENS	DRAWN M.M.
3				
2			P/NO. UV0928CM2	CHECKED H.K.
1				
	07/28/2014		Mfg.NO. VH092A-Y01-0 / UOI UV0928CM2 / SHEET 1 OF 1	REV A